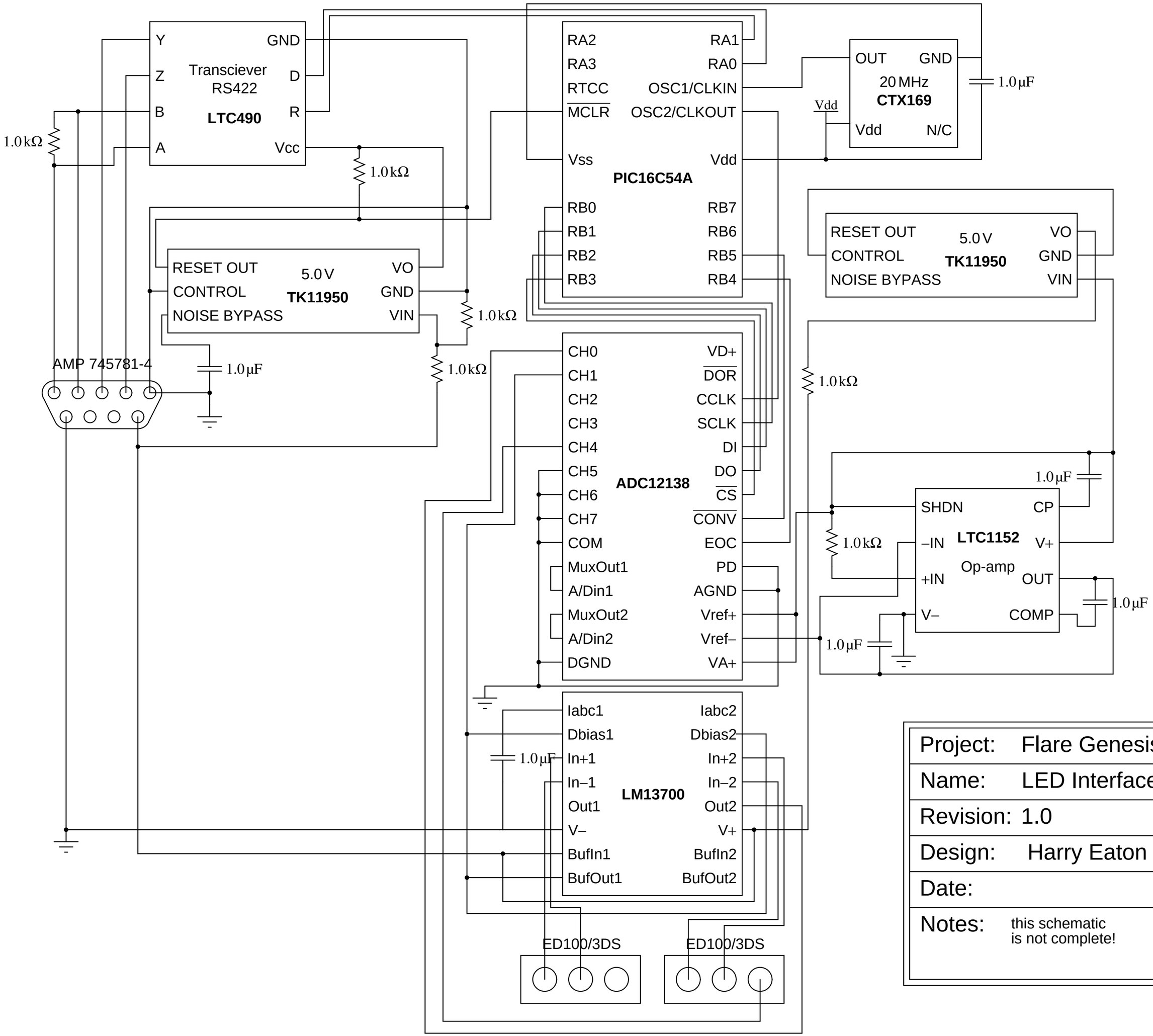

Project:	Flare Genesis
Name:	LED Interface
Revision:	1.0
Design:	Harry Eaton
Date:	
Notes:	this schematic is not complete!