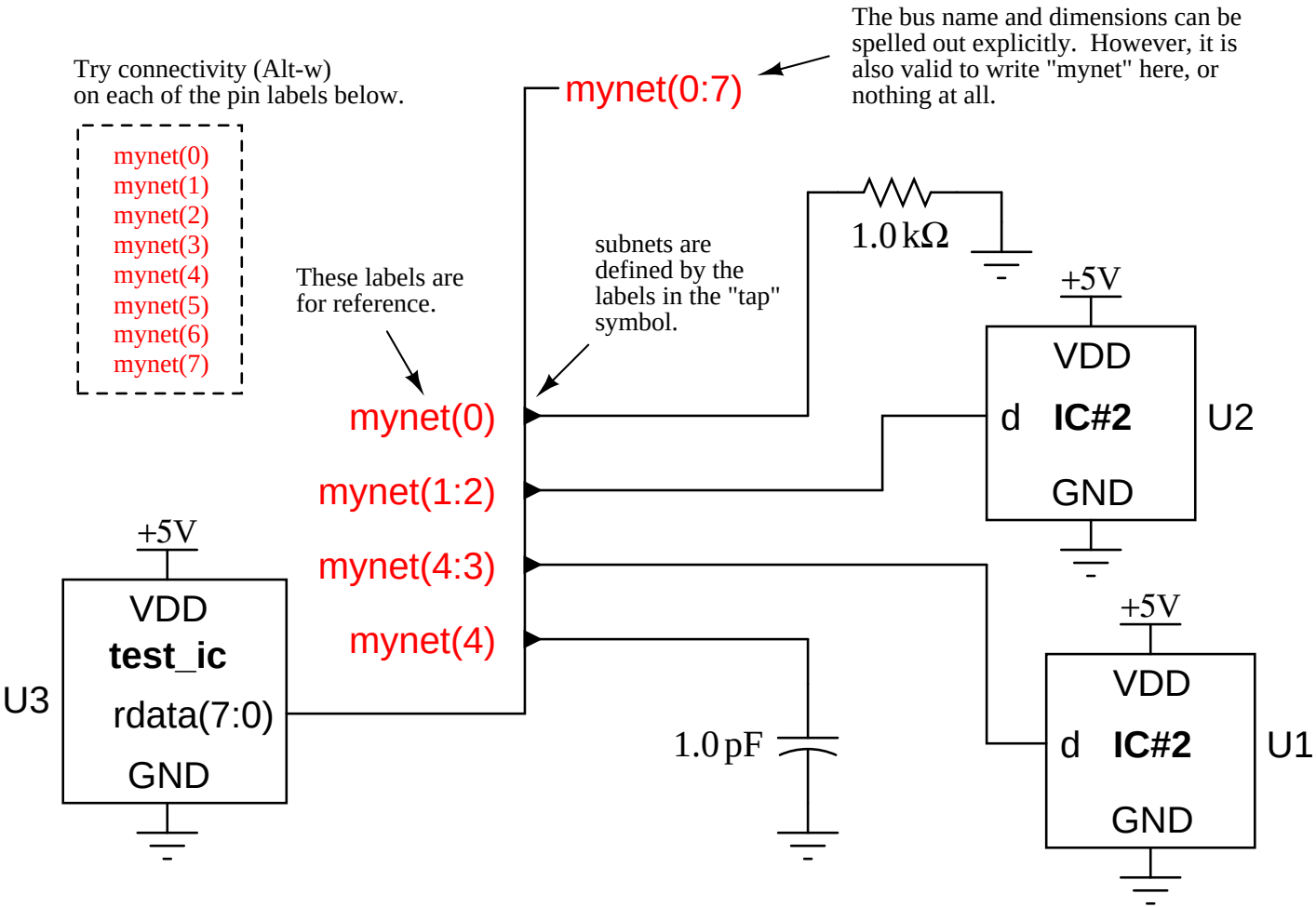

XCircuit bus notation tutorial—buses.ps