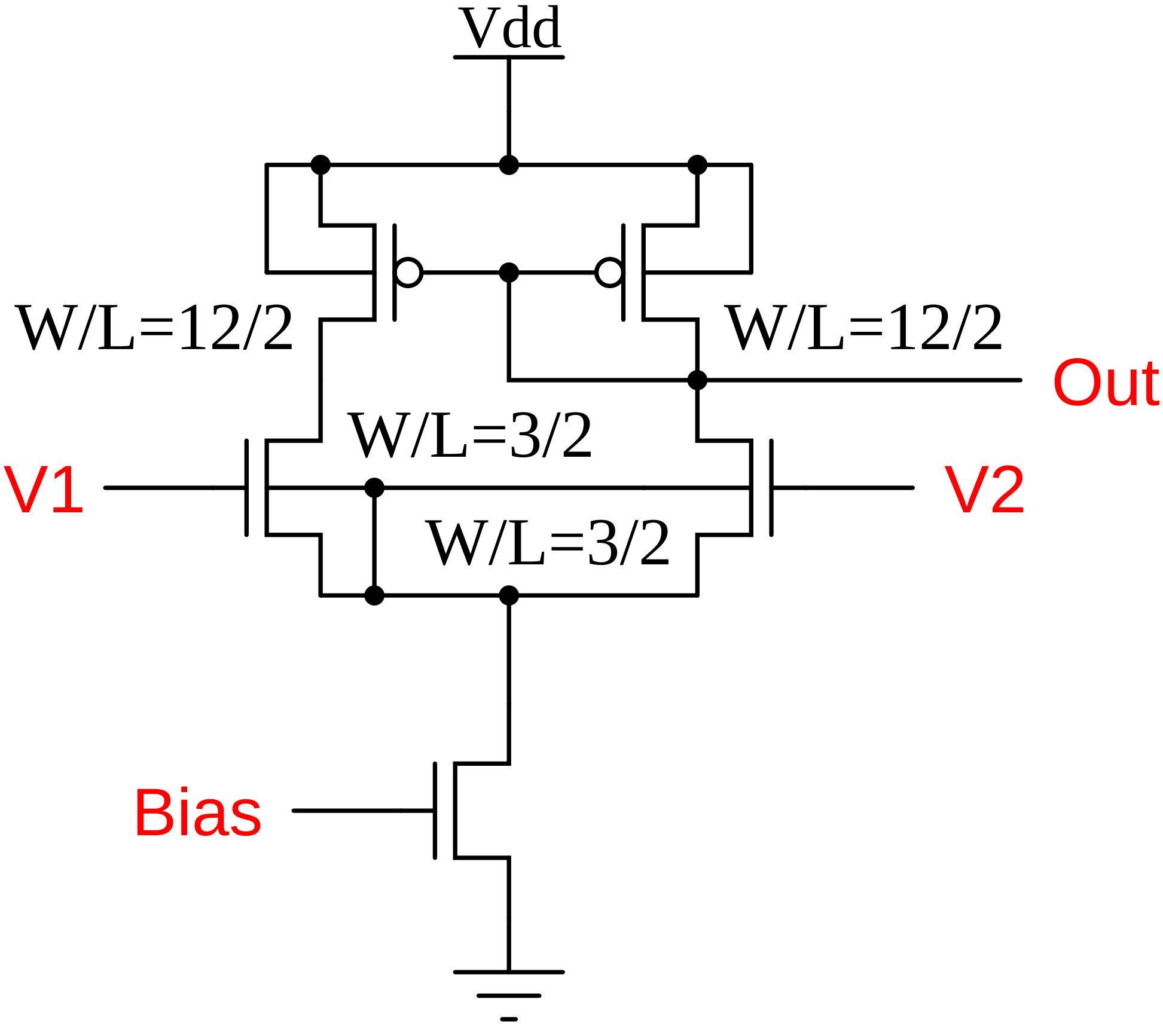
Vdd
W/L=12/2
W/L=12/2
Out
W/L=3/2
V1
V2
W/L=3/2
Bias