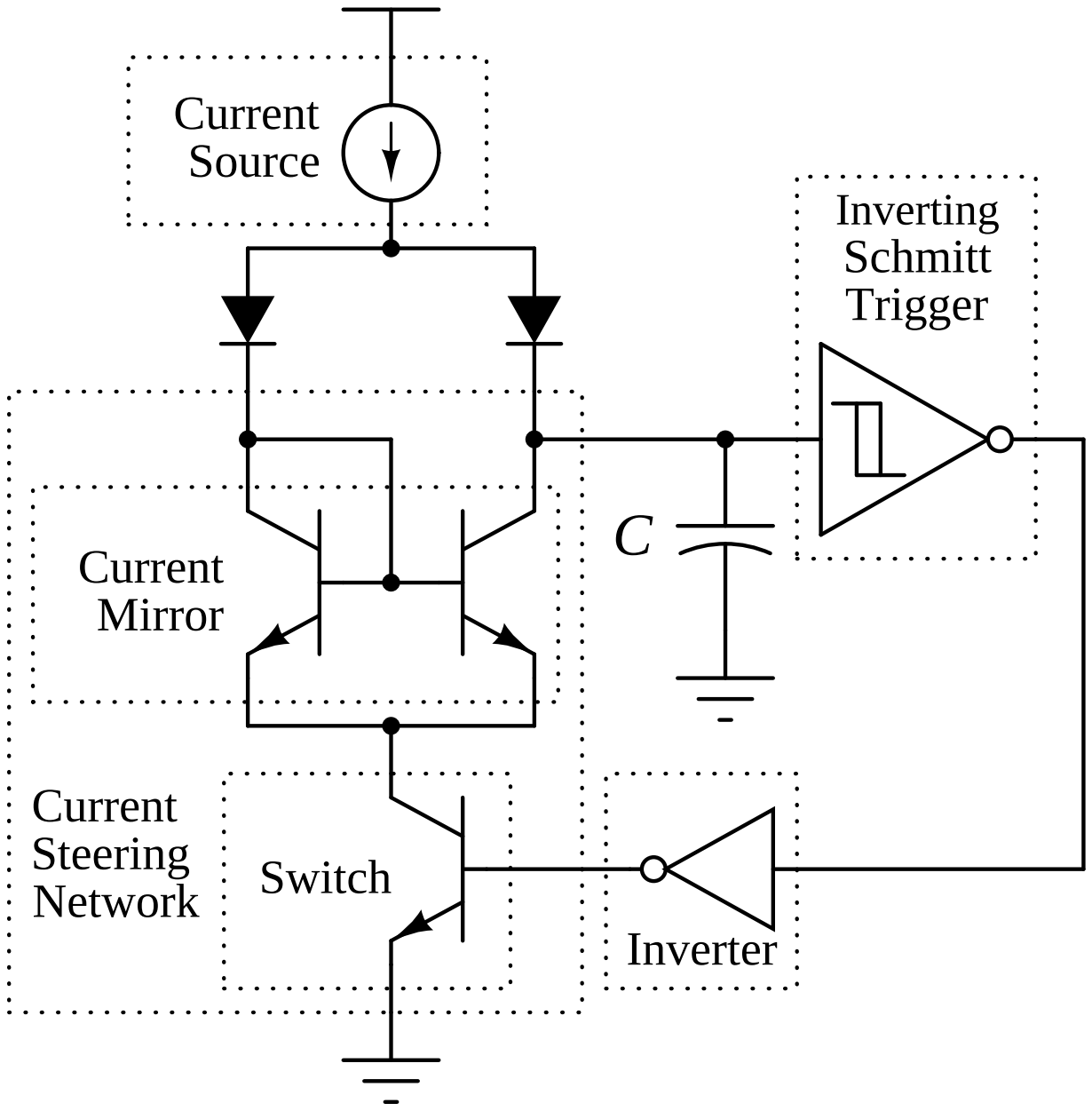
Current
Source
Inverting
Schmitt
Trigger
Current
Mirror
C
Current
Steering
Network
Switch
Inverter